THE INFORMATION CONTAINED IN THIS DRAWING IS THE SOLE PROPERTY OF Comant Industries, Inc. ANY REPRODUCTION IN PART OR WHOLE WITHOUT THE WRITTEN PERMISSION OF Comant Industries, Inc. IS PROHIBITED.

REVISIONS				
LTR	DESCRIPTION		DATE	APPROVED
A	RELEASED DRAWING	MN	9/24/13	DH 09/24/13
B	REF ECN 20-030	RM	6/18/20	DH 6/18/20

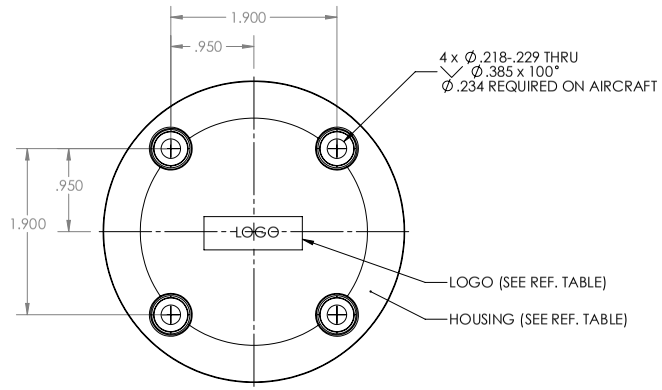

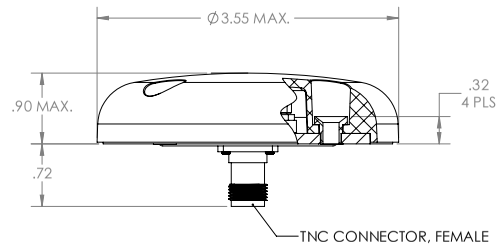

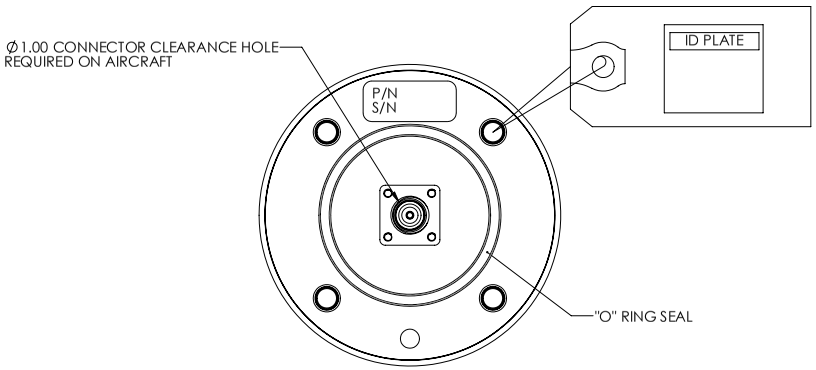

NOTES: UNLESS OTHERWISE SPECIFIED

1. RF CHARACTERISTICS:

FREQUENCY	1616.0 TO 1626.5 MHz
VSWR	1.5:1 MAX.
R/L	-13.98 dB
POLARIZATION	RIGHT HAND CIRCULAR POLARIZATION
RADIATION PATTERN	HEMISPHERICAL
IMPEDANCE	50 OHMS OUTPUT (NOMINAL)
GAIN	+ 3.0 dBic @ ZENITH (MEASURED ON 4' CIRCULAR GROUND PLANE)
POWER HANDLING	6.5 WATTS AVG.
LIGHTNING PROTECTION	DC GROUNDED

2. WEIGHT : 5.0 oz MAX.
3. TSO C159a (INCOMPLETE SYSTEM), RTCA/DO-160G ENV. CAT.:
   [F2X]ACE[R(C,C1)H(R)]XSFSXSXXXX[XXX][XX]X[XXXXXX][2A]AXX
5. A49042 INSTALLATION INSTRUCTIONS SUPPLIED WITH ANTENNA.

DASH NO.	HOUSING	LOGO	ASSY DWG.
	D49036-1	B00979-1	D49035
-1	B49068-1	-	D49067

DWG NO CI 490-490-* REV. B

INSTALLATION DRAWING

PARTS LIST

UNLESS OTHERWISE SPECIFIED	CONTRACT NO.			Comant Industries, Inc.			
DIMENSIONS ARE IN INCHES TOLERANCES ON DECIMALS .XX ± .03 .XXX ± .010 FRACTIONS ± 1/16 ANGLES ± 1°	APPROVALS		DATE	COMDAT ® IRIDIUM ANTENNA			
MACHINE FINISH 125 PER ANSI- B46.1 REMOVE BURRS AND SHARP EDGES .015 MAX MEET DIMENSIONS BEFORE PLATING DIMENSIONS ARE PER ASME Y14.5M	DRAWN	M. NGUYEN	09/24/13				
	CHECK	D. HOLLOWAY	09/24/13				
	ENGR	D. HOLLOWAY	09/24/13				
MATERIAL :	MFG	J. JONES	09/24/13	DWG SIZE C	CODE IDENT 51351	DWG. NO. CI 490-490-*	REV. B
DO NOT SCALE DRAWING	QC	S. ADAMS	09/24/13	SCALE: 1:1	CAD FILE: --	SHEET : 1 OF 1	

THALES

Warning: Drawing for reference only and may be outdated, contact support for current revision.