THE INFORMATION CONTAINED IN THIS DRAWING IS THE SOLE PROPERTY OF Comant Industries, inc. ANY REPRODUCTION IN PART OR WHOLE WITHOUT THE WRITTEN PERMISSION OF Comant Industries, inc. IS PROHIBITED.

REVISIONS				
REV.	DESCRIPTION		DATE	APPROVED
A	RELEASED DRAWING	MN	03/29/12	DH 03/29/12
B	REF ECN 19-088	RM	9/9/19	DH 9/9/19

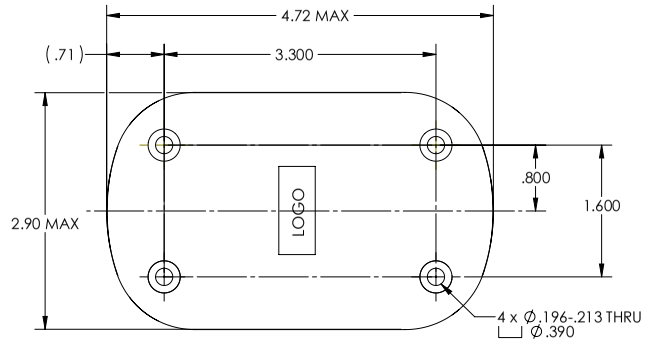

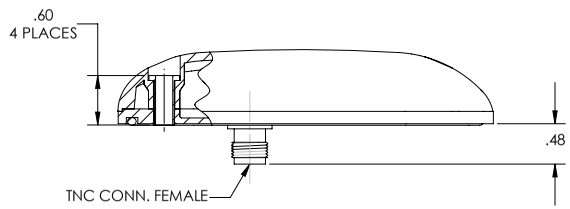

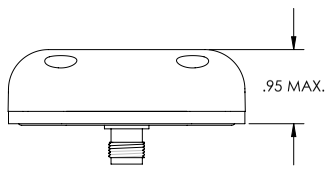

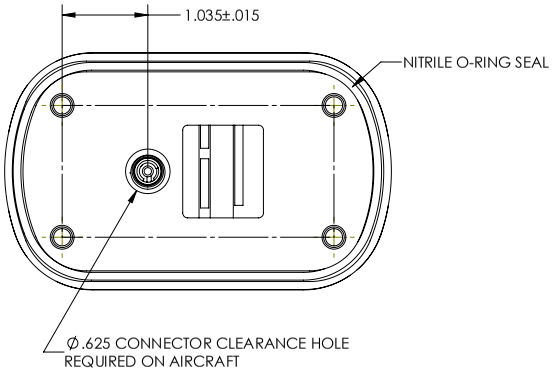

NOTES: UNLESS OTHERWISE SPECIFIED

1. RF CHARACTERISTICS
   - FREQUENCY: 1616.0 TO 1626.5 MHz
   - VSWR: 1.5:1 MAX.
   - R/L:-13.98dB
   - POLARIZATION: RIGHT HAND POLARIZATION
   - RADIATION PATTERN: HEMISPHERICAL
   - IMPEDANCE: 50 OHMS OUTPUT (NOMINAL)
   - GAIN (MEASURED ON 4' CIRCULAR GROUND PLANE): +3.0 dBic @ ZENITH
   - POWER HANDLING: 6.5 WATTS AVG.
   - LIGHTNING PROTECTION: DC GROUND
2. WEIGHT: 6.2 oz MAX.
3. TSO-C159a (INCOMPLETE SYSTEM), RTCA/DO-160G ENV. CAT.:
   [F2X]ACB[S(L)R(C,C1)H(R)]XSFDXSZXXX[XXX][XX]X[XXXXXX][1B]CXX
4. A401188 INSTALLATION INSTRUCTION SUPPLIED WITH ANTENNA.

DWG NO CI 401-490 REV. B

INSTALLATION DRAWING

--	ITEM NO	PART NUMBER	DESCRIPTION	MATERIAL / SPECIFICATIONS
QTY REQD		PARTS LIST		

UNLESS OTHERWISE SPECIFIED
DIMENSIONS ARE IN INCHES
TOLERANCES ON DECIMALS
.XX ± .03 .XXX ± .010
FRACTIONS ± 1/32 ANGLES ± 1°
MACHINE FINISH 125√ PER ANSI- B46.1
REMOVE BURRS AND
SHARP EDGES .015 MAX
MEET DIMENSIONS BEFORE PLATING
DIMENSIONS ARE PER ASME Y14.5M
MATERIAL :
DO NOT SCALE DRAWING

CONTRACT NO.

APPROVALS		DATE
DRAWN	M.NGUYEN	3/29/12
CHECK	D. HOLLOWAY	3/29/12
ENGR	D. HOLLOWAY	3/29/12
MFG	J. JONES	3/29/12
QC	S. ADAMS	3/29/12

Comant Industries, inc.

COMDAT® IRIDIUM ANTENNA

DWG SIZE	CODE IDENT	DWG. NO.	REV.
C	51351	CI 401-490	B

SCALE: 1:1 CAD FILE: -- SHEET : 1 OF 1

ASSY DWG. No. D401187

Warning: Drawing for reference only and may be outdated, contact support for current revision.

THALES