REVISIONS				
LTR	DESCRIPTION		DATE	APPROVAL
E	REDRAWN. REF ECN 03-222	HN	08/15/03	DH 08/22/03
F	REF ECN 06-120	HN	11/17/06	AV 11/17/06
G	REF ECN 07-07	HN	02/07/07	AV 02/07/07
H	REF ECN 08-075	MN	8/20/08	DH 8/20/08
J	REF ECN 08-095	MN	11/19/08	DH 11/19/08

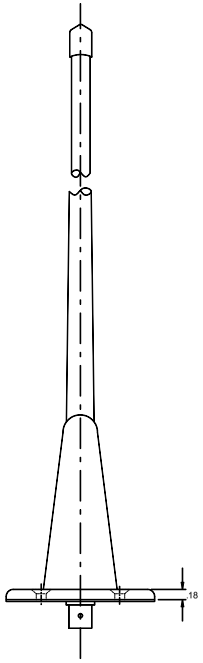

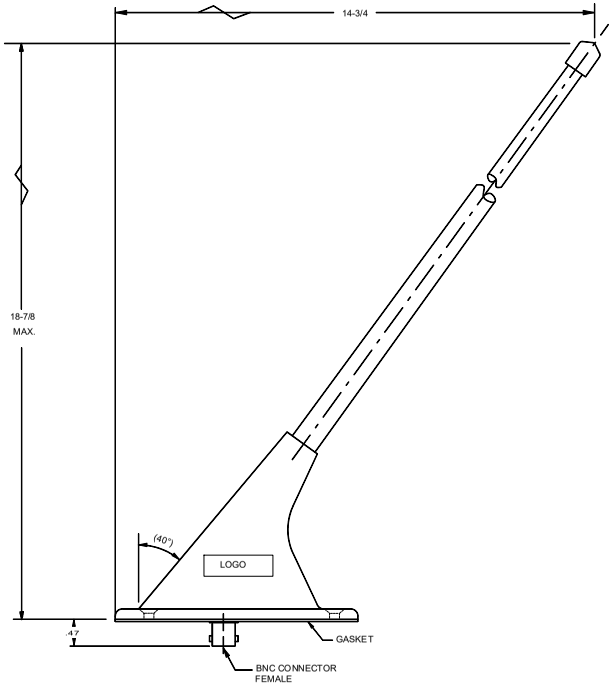

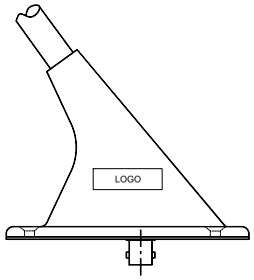

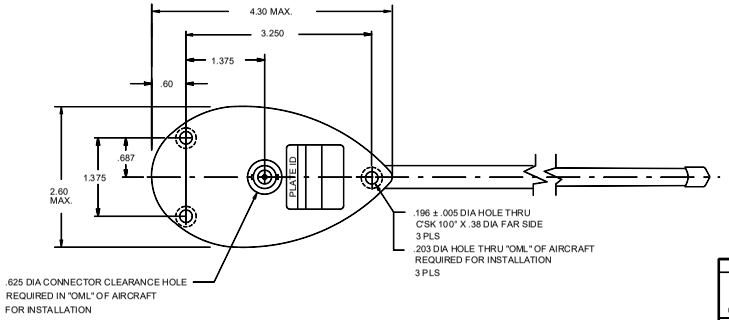

NOTES: UNLESS OTHERWISW SPECIFIED

1. RF CHARACTERISTICS:
   - 1.1 FREQUENCY _____ 118-137 MHZ
   - 1.2 VSWR _____ 2.5:1 MAX.
   - RETURN LOSS _____ -7.36 dB
   - 1.3 POLARIZATION _____ VERTICAL
   - 1.4 RADIATION PATTERN _____ OMNI DIRECTIONAL
   - 1.5 POWER RATING _____ 50 WATTS
   - 1.6 IMPEDANCE _____ 50 OHMS NOMINAL
2. FINISH: GLOSSY WHITE POLYURETHANE PAINT NON YELLOWING.
3. MOUNTING SURFACE, CONNECTOR AND MOUNTING HOLES ARE FREE OF PAINT.
5. TSO C37d, C38d, RTCA DO-160D, ENV. CAT. : [D2X]ACB[R(C,C1)U(F,F1)]XWFDXSXXXXX[XX]X[XXXX]XAX
5. WEIGHT: 0.5 LB
6. AIRSPEED RATING: 250 KNOTS TAS

ASSY DWG. D29101

INSTALLATION DRAWING

UNLESS OTHERWISE SPECIFIED DIMENSIONS ARE IN INCHES TOLERANCES ON DEC .XX ± .03 .XXX ± .010 FRACTIONS ± 1/16 ANGLES ± 1° MACHINE FINISH 125 μ PER ASME B46.1 REMOVE BURRS AND SHARP EDGES .015 MAX. MEET DIM. BEFORE PLATING DIMENSIONS ARE PER ASME Y 14.5M MATERIAL DO NOT SCALE DRAWING	CONTRACT NO.		
	DATE	AUG 15-03	
	DRAWN	H. NGUYEN	8/15/03
	CHECK	J. GOMEZ	8/22/03
	ENGR	D. HOLLOWAY	8/22/03
	QC	J. GARCIA	8/22/03
	APPD	D. HOLLOWAY	8/22/03

Comant Industries, Inc.

TITLE
ANTENNA-
VHF COMMUNICATIONS

D | CODE IDENT 51351 | DWG. NO. CI 291 | WT: | SHT 1 OF 1

CI 291 J1

THALES

Warning: Drawing for reference only and may be outdated, contact support for current revision.