THE INFORMATION CONTAINED IN THIS DRAWING IS THE SOLE PROPERTY OF Comant Industries Inc. ANY REPRODUCTION IN PART OR WHOLE WITHOUT THE WRITTEN PERMISSION OF Comant Industries Inc. IS PROHIBITED.

REVISIONS				
LTR	DESCRIPTION		DATE	APPROVAL
A	RELEASED DRAWING	JF	10/18/04	DH 10/18/04
B	REF ECN 08-095	MN	11/17/08	DH 11/19/08

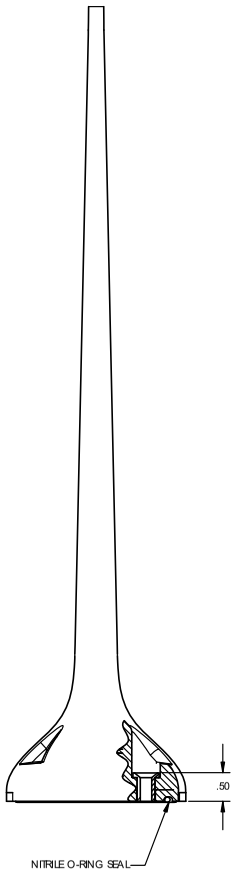

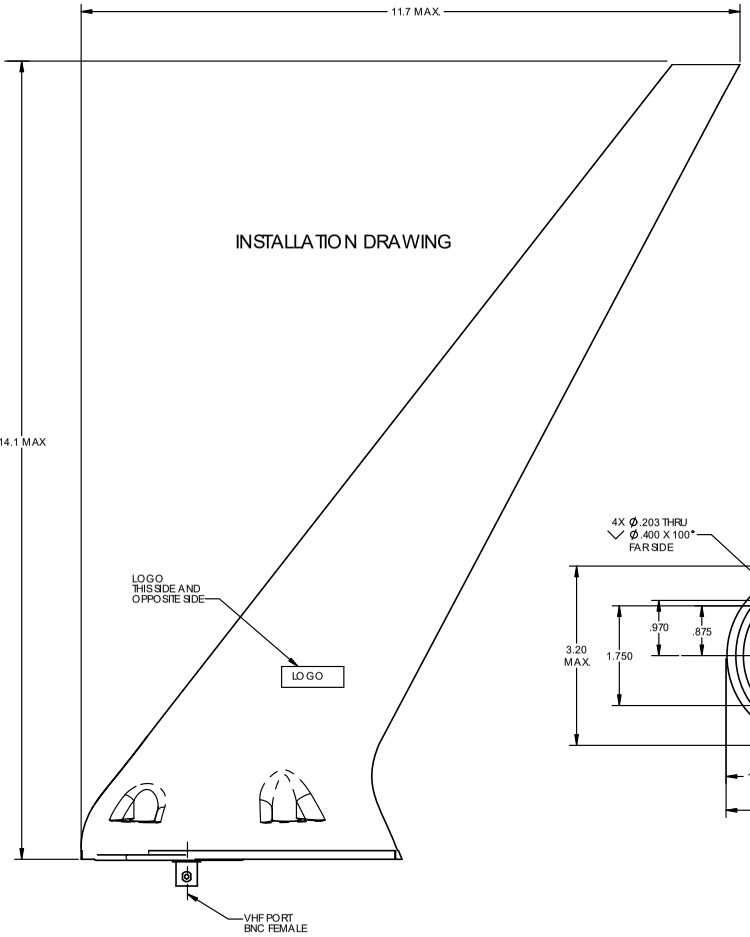

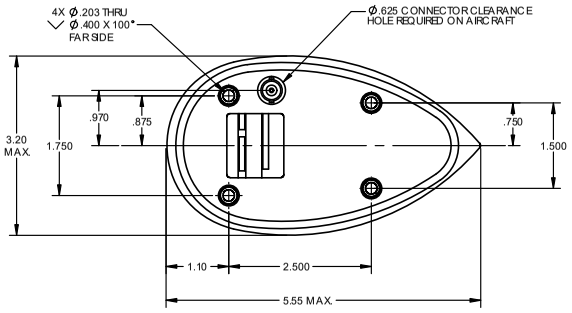

ANTENNA NOTES AND SPECIFICATIONS

1.0 VHF - ANTENNA CHARACTERISTICS (T_A= 20° C ± 5° C)

1.1 RF CHARACTERISTICS – VHF COMM

FREQUENCY ____ 118 - 137 MHz

VSWR ____ 2.9: 1 MAX.

RL ____ 6.25 dB

POLARIZATION ____ VERTICAL

RADIATION PATTERN ____ OMNIDIRECTIONAL

POWER RATING ____ 50 WATTS

IMPEDANCE ____ 50 OHMS

2.0 ANTENNA WEIGHT ____ 1.25 LB. MAX.

3.0 TSO C37d, C38d (INCOMPLETE SYSTEM)

RTCA DO-160D, ENV. CAT.: [F2X]ACB[S(C,L,M)T(C1,Y,R)]XSFDXSXXXXX[XX]X[XXXX]XCX

4.0 SHELL CONSTRUCTION MATERIAL: 60% GLASS-FILLED NYLON

5.0 FINISH: GLOSSY WHITE POLYURETHANE PAINT

6.0 MOUNTING SURFACE, CONNECTORS AND MOUNTING HOLES ARE FREE OF PAINT.

7.0 A268112 INSTALLATION INSTRUCTIONS SUPPLIED WITH ANTENNA.

ASSEMBLY DRAWING NO. D268111

QTY REQD	ITEM NO	PART NUMBER	DESCRIPTION	MATERIAL / SPECIFICATIONS
		PARTS LIST		

UNLESS OTHERWISE SPECIFIED
DIMENSIONS ARE IN INCHES
TOLERANCES ON DECIMALS
X.X ± .03 .XXX ± .010
FRACTIONS ± 1/32 ANGLES ± 1°
MACHINE FINISH 125✓ PER ANSI- B46.1
REMOVE BURRS AND
SHARP EDGES .015 MAX
MEET DIMENSIONS BEFORE PLATING
DIMENSIONS ARE PER ASME Y14.5M
MATERIAL : --
DO NOT SCALE DRAWING

CONTRACT NO.

APPROVALS		DATE
DRAWN	J FRANKS	10/14/04
CHECK	J GOMEZ	10/18/04
ENGR	D HOLLOWAY	10/18/04
QC	SADAMS	10/18/04
APPD	D HOLLOWAY	10/18/04

Comant Industries, inc.

VHF ANTENNA

DWG SIZE	CODE IDENT	DWG. NO.	REV.
D	51351	CI 268-60	B

SCALE: 1:1 CAD FILE: -- SHEET : 1 OF 1

CI 268-60 REV B

THALES

Warning: Drawing for reference only and may be outdated, contact support for current revision.