THE INFORMATION CONTAINED IN THIS DRAWING IS THE SOLE PROPERTY OF Comant Industries, Inc. ANY REPRODUCTION IN PART OR WHOLE WITHOUT THE WRITTEN PERMISSION OF Comant Industries, Inc. IS PROHIBITED.

REVISIONS				
LTR	DESCRIPTION		DATE	APPROVED
A	RELEASED DRAWING	HN	10/30/02	DH 10/30/02
B	REF ECN 06-089	HN	09/21/06	DH 09/21/06
C	REF ECN 08-085	MN	12/09/08	DH 12/16/08
D	REF ECN 19-042	MN	05/15/19	DH 05/15/19
E	REF ECN 19-069	RM	8/22/19	DH 8/26/19

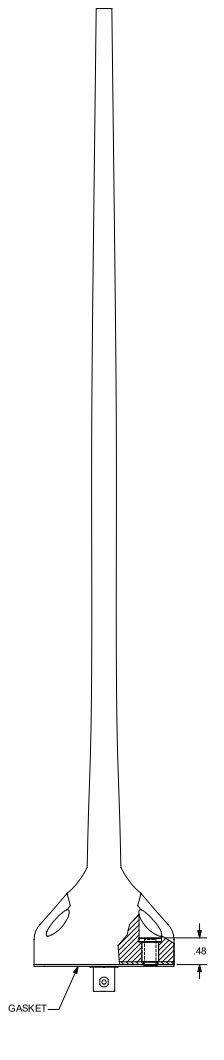

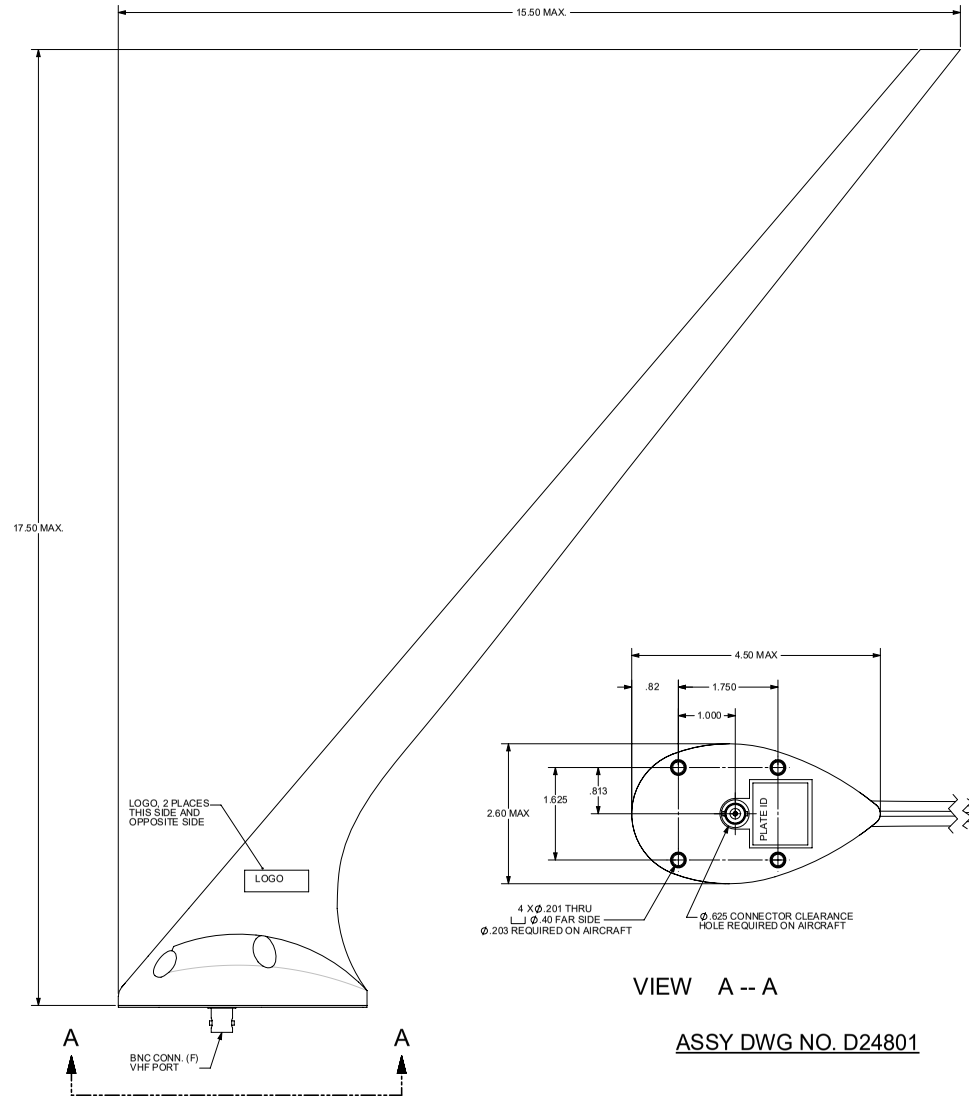

VIEW A -- A

ASSY DWG NO. D24801

NOTES: UNLESS OTHERWISE SPECIFIED

1. RF CHARACTERISTICS
   - FREQUENCY _____ 118 - 137 MHz
   - VSWR _____ 2.5 : 1 MAX
   - R/L _____ -7.36 dB
   - POLARIZATION _____ VERTICAL
   - RADIATION PATTERN _____ OMNI DIRECTIONAL
   - RF POWER _____ 25 WATTS
   - IMPEDANCE _____ 50 OHMS
2. WEIGHT: 0.52 LB.
3. TSO C37d, C38d RTCA DO-160D ENV. CAT.:
   [F2X]ACB[S(L)U(F,F1)T(C,C1,R)XRFDXSXXXXX[XX]X[XXXX]XAX
4. SHELL CONSTRUCTION MATERIAL: 60% GLASS-FILLED NYLON
5. FINISH: WHITE POLYURETHANE PAINT.
6. AIRSPEED RATING; 300 KNOTS TAS AT 35,000 FT
7. MOUNTING SURFACE, CONNECTOR AND MOUNTING HOLES ARE FREE OF PAINT.
8. GASKET P/N: B24809 (INCLUDED)
9. NOTCH FILTER (80 dB) ADDED TO IMPROVE GPS HARMONIC SUPPRESSION.

INSTALLATION DRAWING

PARTS LIST

UNLESS OTHERWISE SPECIFIED
DIMENSIONS ARE IN INCHES
TOLERANCES ON
DECIMALS .XX ± .03 .XXX ± .010
FRACTIONS ± 1/16 ANGLES ± 1°
MACHINE FINISH 125√ PER ANSI- B46.1
REMOVE BURRS AND
SHARP EDGES .015 MAX
MEET DIMENSIONS BEFORE PLATING
DIMENSIONS ARE PER ASME Y14.5M
MATERIAL :
DO NOT SCALE DRAWING

CONTRACT NO.

APPROVALS		DATE
DRAWN	H. NGUYEN	08/05/02
CHECK	M. KASHANPOUR	08/05/02
ENGR	D. HOLLOWAY	08/05/02
APPD	D. HOLLOWAY	08/05/02
QC	P. BOSNEANU	08/05/02

Comant Industries, inc.

ANTENNA-
VHF COMMUNICATIONS

DWG SIZE	CODE IDENT	DWG. NO.	REV.
D	51351	CI 248-5	E

SCALE: 1 / 1 CAD FILE: -- SHEET : 1 OF 1

DWG NO CI 248-5 REV E

THALES

Warning: Drawing for reference only and may be outdated, contact support for current revision.