THE INFORMATION CONTAINED IN THIS DRAWING IS THE SOLE PROPERTY OF Comant Industries, Inc. ANY REPRODUCTION IN PART OR WHOLE WITHOUT THE WRITTEN PERMISSION OF Comant Industries, Inc. IS PROHIBITED.

REVISIONS				
LTR	DESCRIPTION		DATE	APPROVAL
J	REDRAWN WITH CHANGE PER ECN 03-91	MN	05/16/03	DH 05/20/03
K	REF ECN 06-120	MN	11/17/06	AV 11/17/06
L	REF ECN 08-095	MN	11/21/08	DH 11/29/08
M	REF ECN 19-064	RM	7/12/19	DH 7/12/19

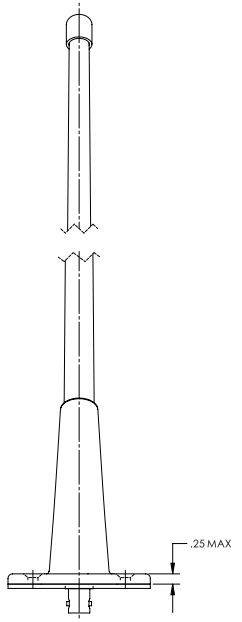

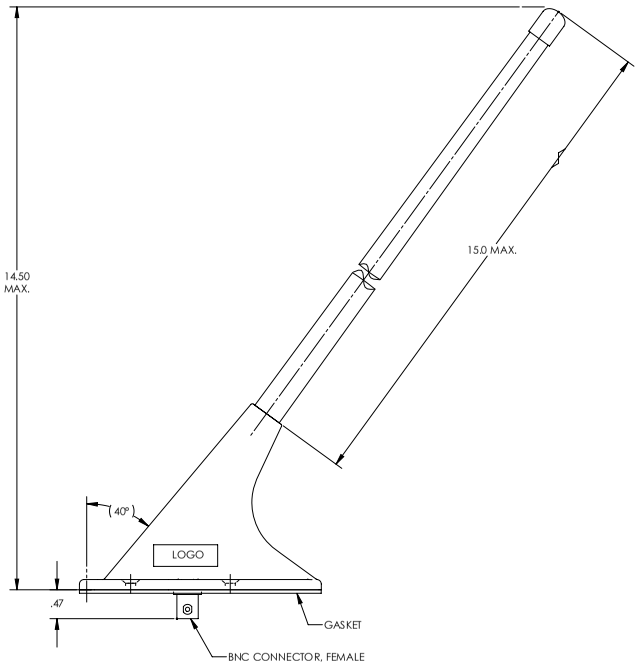

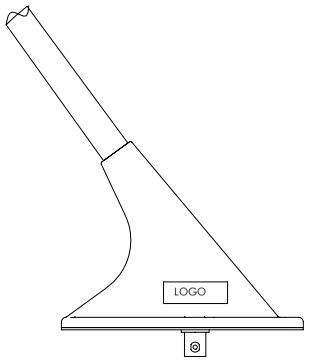

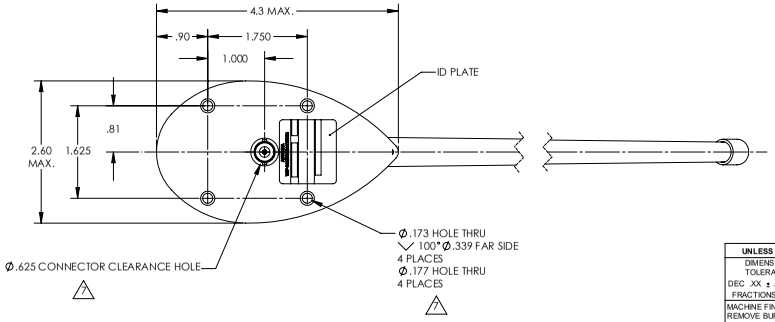

NOTES: UNLESS OTHERWISE SPECIFIED

1. RF CHARACTERISTICS:
   - 1.1 FREQUENCY ..... 148 - 174 MHz
   - 1.2 VSWR ..... 2.5 : 1 MAX.
   - RETURN LOSS ..... -7.36 dB
   - 1.3 POLARIZATION ..... VERTICAL
   - 1.4 RADIATION PATTERN ..... OMNI DIRECTIONAL
   - 1.5 POWER RATING ..... 50 WATTS
   - 1.6 IMPEDANCE ..... 50 OHMS NOMINAL
2. FINISH: GLOSSY WHITE POLYURETHANE PAINT NON YELLOWING.
3. MOUNTING SURFACE, CONNECTOR AND MOUNTING HOLES ARE FREE OF PAINT.
4. WEIGHT: 0.5 LB. MAX.
5. TSO C37b, C38b, DO-138, ENV. CAT.: BAJXXXXXXXXX
6. AIR SPEED RATING: 450 KNOTS TAS @ 25,000 FT.

7 HOLES THRU OML OF AIRCRAFT FOR INSTALLATION.

ASSY. DWG. D17701

INSTALLATION DRAWING

UNLESS OTHERWISE SPECIFIED			
DIMENSIONS ARE IN INCHES TOLERANCES ON DECIMALS DEC .XX ± .03 .XXX ± .010 FRACTIONS ± 1/16 ANGLES ± 1°	CONTRACT NO.		
MACHINE FINISH 125√ PER ANSI- B46.1 REMOVE BURRS AND SHARP EDGES .015 MAX MEET DIMENSIONS BEFORE PLATING DIMENSIONS ARE PER ASME Y14.5M	APPROVALS		DATE
MATERIAL : --	DRAWN	H.NGUYEN	5/16/03
	CHECK	J.GOMEZ	5/20/03
	ENGR	D.HOLLOWAY	5/20/03
	QC	P.BOSNEANU	5/20/03
DO NOT SCALE DRAWING	APPD	D.HOLLOWAY	5/20/03

Comant Industries, Inc.

ANTENNA-
VHF COMMUNICATIONS

DWG SIZE	CODE IDENT	DWG. NO.	REV.
D	51351	CI 177	M

SCALE: -- CAD FILE: -- SHEET : 1 OF 1

REV. M DWG NO. CI 177

THALES

Warning: Drawing for reference only and may be outdated, contact support for current revision.