THE INFORMATION CONTAINED IN THIS DRAWING IS THE SOLE PROPERTY OF Comant Industries, Inc. ANY REPRODUCTION IN PART OR WHOLE WITHOUT THE WRITTEN PERMISSION OF Comant Industries, Inc. IS PROHIBITED.

REVISIONS				
LTR	DESCRIPTION		DATE	APPROVED
A	2-5/8 WAS 2-3/4		3/3/76	DS 3/3/76
B	IN NOTE 5a AAJXXXXXXXXXX 'WAS' BAJXXXXXXXXXX ADD NOTE 5b		4/14/76	DS 4/14/76
C	REVISED DIM IS: 2.1 MAX WAS: 2.0, IS: 24.0 MAX WAS: 23-7/8 ± 1/8 IS: .550 MAX WAS: .512 MIN, IS: 55° WAS: 60° ±5°, ADDED .205 DIA HOLE & .575 DIA HOLE, ADDED NOTE 6 & 7, DELETE .46 DIA		12/30/85	DS 1/19/86
D	REF E.O. NO. 87-4	HN	4/1/88	4/1/88
E	REF ECN 97-38	HN	3/15/97	DH 3/17/97
F	REF ECN 02-106	DJ	5/10/02	DH 5/15/02
G	REF ECN 23-020	RM	3/7/23	DH 03/07/23

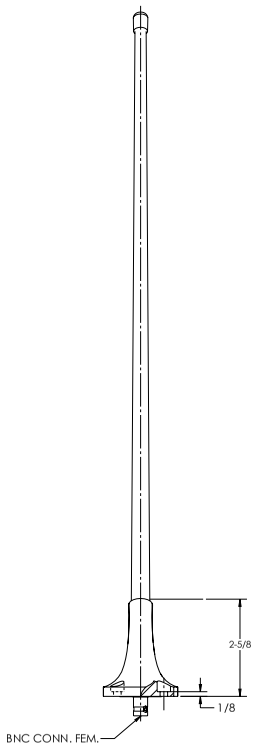

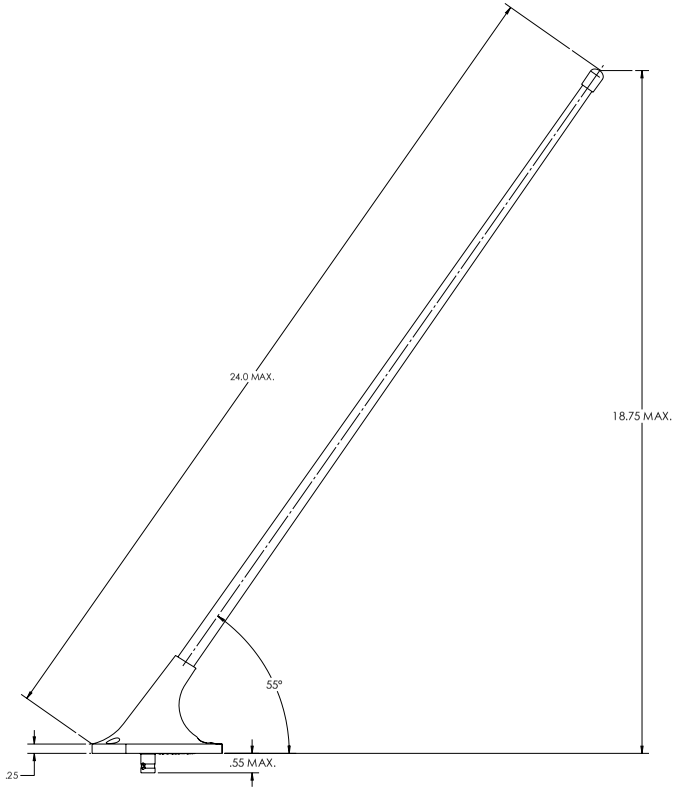

NOTES: UNLESS OTHERWISE SPECIFIED

1. RF CHARACTERISTICS
   - FREQUENCY : 118 - 137 MHz
   - VSWR : 2.5: 1 MAXIMUM
   - POLARIZATION : VERTICAL
   - ANTENNA GAIN : 2.5 dBi MINIMUM @ BEAM MAXIMUM
   - RADIATION PATTERN : OMNI DIRECTIONAL
   - POWER RATING : 50 WATTS
   - IMPEDANCE : 50 OHMS NOMINAL
2. MOUNTING SURFACE, CONNECTOR AND MOUNTING HOLES ARE FREE OF PAINT.
3. FINISH: GLOSSY WHITE EPOXY PAINT NON YELLOWING.
4. WEIGHT: 0.5 LBS.

5a. TSO C37d, C38d, RTCA DO-160D, ENV. CAT.: [D2X]ACB[R(C,C1)U(F,F1)XWFDXSXXXXX[XX]X[XXXX]XAX

5b. ANTENNA MEETS THE POWER & VSWR REQUIREMENTS BEFORE AND AFTER THE FOLLOWING VIBRATION TEST-CONSTANT TOTAL EXCURSION OF .030 INCH FROM 10 TO 55 Hz WITH MAXIMUM ACCELERATION OF 5G & CONSTANT ACCELERATION OF 5G FROM 55 TO 500 Hz

6. AIR SPEED RATING: 250 KNOTS TAS

7. HOLES REQUIRED THRU "OML" OF AIRCRAFT FOR INSTALLATION

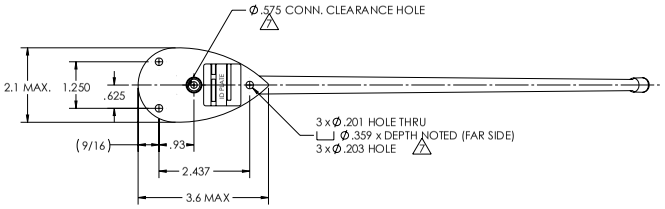

ASSY DWG. C17501

INSTALLATION DRAWING

--	ITEM NO.	PART NUMBER	DESCRIPTION	MATERIAL / SPECIFICATIONS
QTY REQD		PARTS LIST		

UNLESS OTHERWISE SPECIFIED
DIMENSIONS ARE IN INCHES
TOLERANCES ON DECIMALS
.XX ± .03 .XXX ± .010
FRACTIONS ±1/16 ANGLES ± 1°
MACHINE FINISH 125 PER ANSI-B46.1
REMOVE BURRS AND SHARP EDGES .015 MAX
MEET DIMENSIONS BEFORE PLATING
DIMENSIONS ARE PER ASME Y14.5M
MATERIAL : --
DO NOT SCALE DRAWING

CONTRACT NO.

APPROVALS		DATE
DRAWN	F. FRADO	1/30/76
CHECK	H. SUMMERS	1/30/76
ENGR	D. JOHNSON	1/30/76
APPD	H. SUMMERS	1/30/76

Comant Industries, Inc.

ANTENNA-
VHF-COMMUNICATIONS

DWG SIZE	CODE IDENT	DWG. NO.	REV.
D	51351	CI 175	G

SCALE: NONE CAD FILE: -- SHEET : 1 OF 1

DWG NO CI 175 REV G

Warning: Drawing for reference only and may be outdated, contact support for current revision.