THE INFORMATION CONTAINED IN THE DRAWING IS THE SOLE PROPERTY OF Comant Industries, Inc. ANY REPRODUCTION IN PART OR WHOLE WITHOUT THE WRITTEN PERMISSION OF Comant Industries, Inc. IS PROHIBITED.

REVISIONS			
LTR	DESCRIPTION	DATE	APPROVAL
J	REDRAW IN 3D CAD. REF ECN 18-001	HN 5/29/18	DH 5/31/18

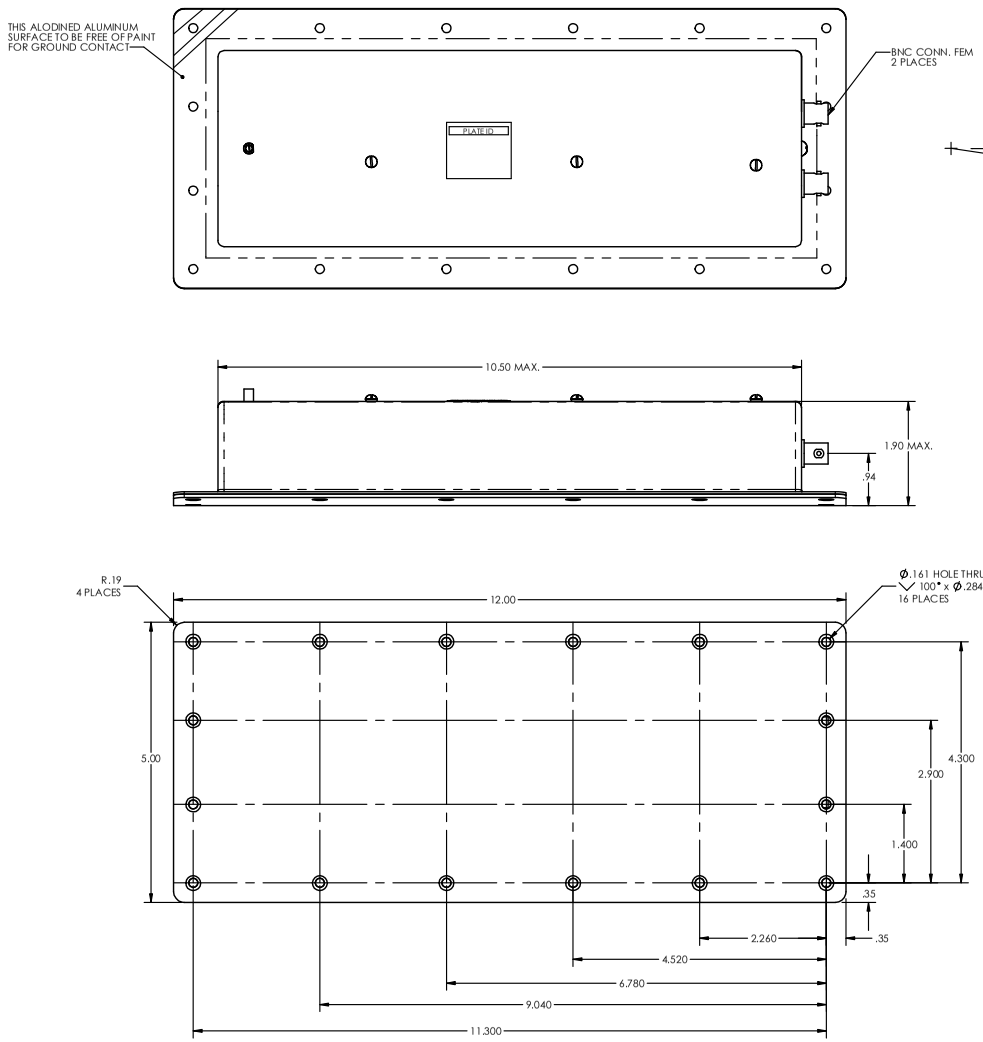

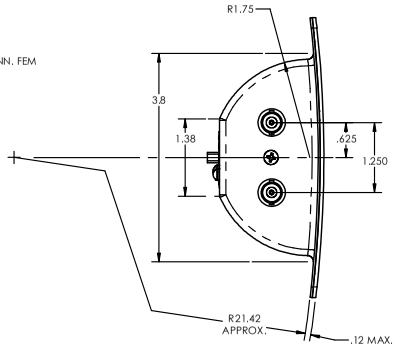

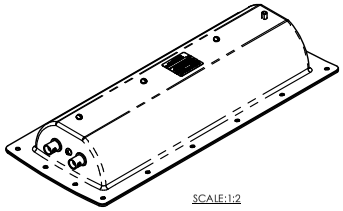

SCALE:1:2

NOTES: UNLESS OTHERWISE SPECIFIED

1. RF CHARACTERISTICS:
   FREQUENCY: 75 MHz ± .15 MHz
   VSWR: 1.5:1 MAX @ 75 MHz
   5.0:1 MAX @ .15 MHz
   POLARIZATION: HORIZONTAL
   ISOLATION: BETWEEN ANTENNA PORTS 20 dB MIN
2. TSO C35d, ENV. CAT.: AASXXXXXXXXX CLASS A, DO-138.
3. FINISH: GLASS LAMINATE COVER. WHITE POLYURETHANE PAINT NON-YELLOWING ALUMINUM HOUSING: FLAT GREY EPOXY PAINT.
4. CONSULT FAA ADVISORY CIRCULAR 43-13-2 FOR PROPER INSTALLATION.

ASSY DWG. 16D00401-2

--	ITEM NO.	PART NUMBER	DESCRIPTION	MATERIAL / SPECIFICATIONS
QTY REQD		PARTS LIST		

UNLESS OTHERWISE SPECIFIED
DIMENSIONS ARE IN INCHES
TOLERANCES ON DECIMALS
.X ± .03 .XX ± .01 .XXX ± .005
FRACTIONS ± 1/32 ANGLES ± 1°
MACHINE FINISH 125✓ PER ANSI- B46.1
REMOVE BURRS AND SHARP EDGES .015 MAX.
MEET DIMENSIONS BEFORE PLATING
DIMENSIONS ARE PER ASME Y14.5M
MATERIAL: --
DO NOT SCALE DRAWING

CONTRACT NO.

APPROVALS		DATE
DRAWN	F. PRADO	10/7/74
CHECK	H. SUMMERS	10/8/74
ENGR	H. SUMMERS	10/10/74
APPD	WWS III	10/31/74

Comant Industries, Inc.

ANTENNA-
MARKER BEACON-

DWG SIZE	CODE IDENT	DWG. NO.	REV.
D	51351	CI 164	J

SCALE: 1/1 WEIGHT: 1.00 LBS SHEET: 1 OF 1

J CI 164 D 51351

Warning: Drawing for reference only and may be outdated, contact support for current revision.

THALES