THE INFORMATION CONTAINED IN THIS DRAWING IS THE SOLE PROPERTY OF Comant Industries, Inc. ANY REPRODUCTION IN PART OR WHOLE WITHOUT THE WRITTEN PERMISSION OF Comant Industries, Inc. IS PROHIBITED.

REVISIONS				
LTR	DESCRIPTION		DATE	APPROVED
K	REF ECN 06-98	MN	9/22/06	AV 9/22/06
L	REF ECN 08-095	MN	11/11/08	DH 11/11/08
M	REF ECN 20-091	RM	12/21/20	DH 12/21/20

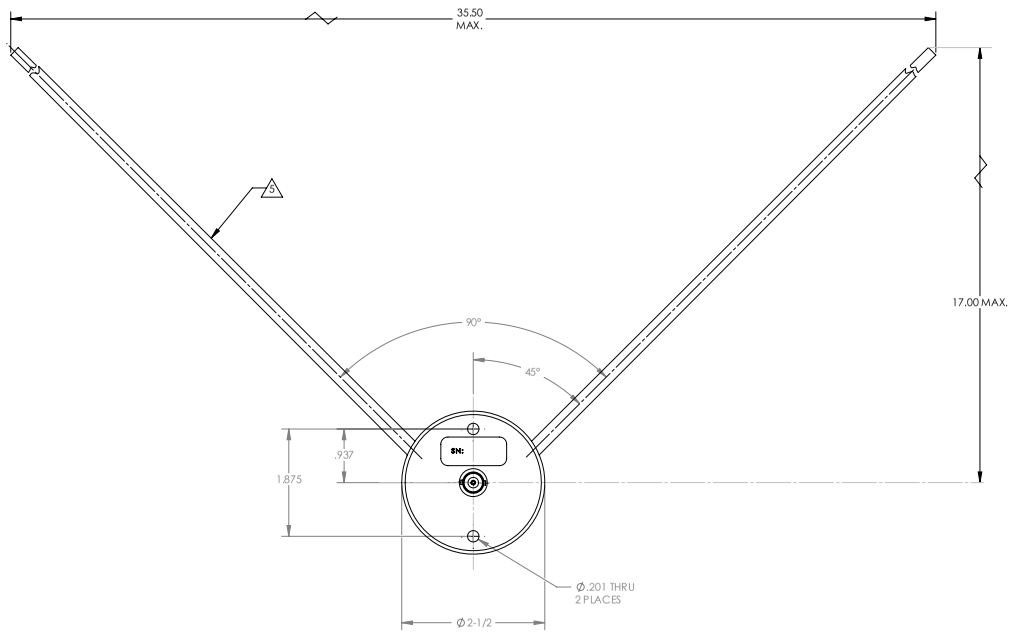

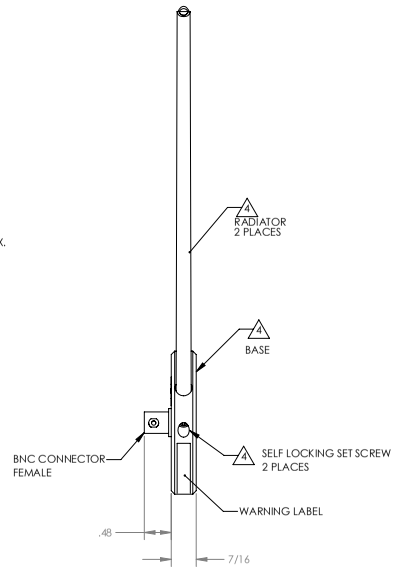

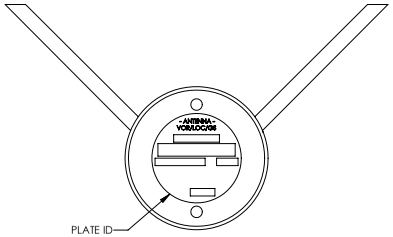

NOTES; UNLESS OTHERWISE SPECIFIED.

1. RE CHARACTERISTICS:
   - FREQUENCY _____ 108 TO 118 MHz
     329 TO 335 MHz
   - VSWR _____ 3.0:1 MAX.
   - RETURN LOSS _____ -6.02 dB
   - POLARIZATION _____ HORIZONTAL
   - IMPEDANCE _____ 50 OHMS NOMINAL
2. ANTENNA BALUN INTERNAL TO MOUNTING BASE.
3. WEIGHT: .45 LB
4. ANTENNA SHIPPED WITH RADIATORS DISASSEMBLED. TO ASSEMBLE, SCREW RADIATORS INTO BASE AND LOCK IN PLACE WITH SELF LOCKING SET SCREWS.
5. POLYESTER GLASS LAMINATE RADIATOR PROVIDES PROTECTION AGAINST PRECIPITATION STATIC.
6. TSO C34c, C36c, C40a, DO-160 ENV. CAT.: B2ALXXXXXXXXXXX
7. SPEED RATING: 250 KNOTS TAS
8. TEST PROCEDURE NO. 159C

ASSEMBLY DRAWING B15901

INSTALLATION DRAWING

UNLESS OTHERWISE SPECIFIED DIMENSIONS ARE IN INCHES TOLERANCES ON DECIMALS .X ± .03 .XX ± .01 .XXX ± .005 FRACTIONS ± 1/32 ANGLES ± 1° MACHINE FINISH 125√ PER ANSI- B46.1 REMOVE BURRS AND SHARP EDGES .015 MAX MEET DIMENSIONS BEFORE PLATING DIMENSIONS ARE PER ASME Y14.5M MATERIAL : --	CONTRACT NO.		Comant Industries, Inc.
	APPROVALS	DATE	ANTENNA - DIPOLE VOR / LOC / GLIDE SLOPE
	DRAWN DAVEY	05/05/79	
	CHECK D. MARARAS	08/19/79	
	ENGR J. R. TORRES	08/30/79	
DO NOT SCALE DRAWING	APPD R. SICCAMA	08/30/79	DWG SIZE D · CODE IDENT 51351 · DWG. NO. CI 159C · REV. M
			SCALE: -- · CAD FILE: -- · SHEET : 1 OF 1

Warning: Drawing for reference only and may be outdated, contact support for current revision.

THALES