THE INFORMATION CONTAINED IN THIS DRAWING IS THE SOLE PROPERTY OF Comant Industries, inc. ANY REPRODUCTION IN PART OR WHOLE WITHOUT THE WRITTEN PERMISSION OF Comant Industries, inc. IS PROHIBITED.

REVISIONS				
LTR	DESCRIPTION		DATE	APPROVAL
A	RELEASED DRAWING	MN	07/13/15	DH 07/13/15
B	REF ECN 17-248	MN	11/29/17	DH 11/29/17

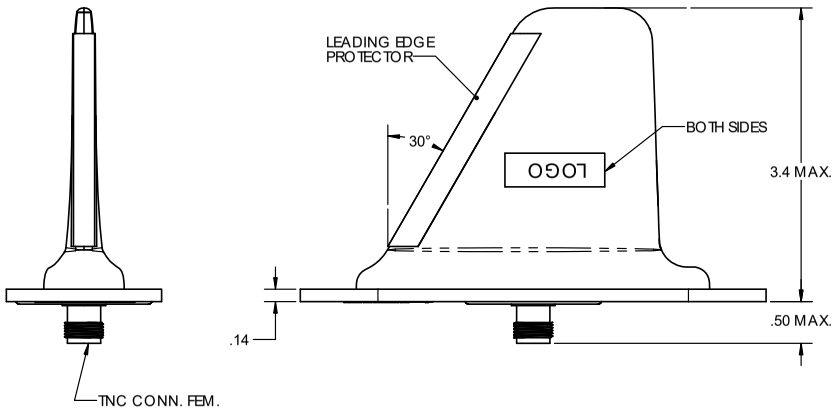

INSTALLATION DRAWING

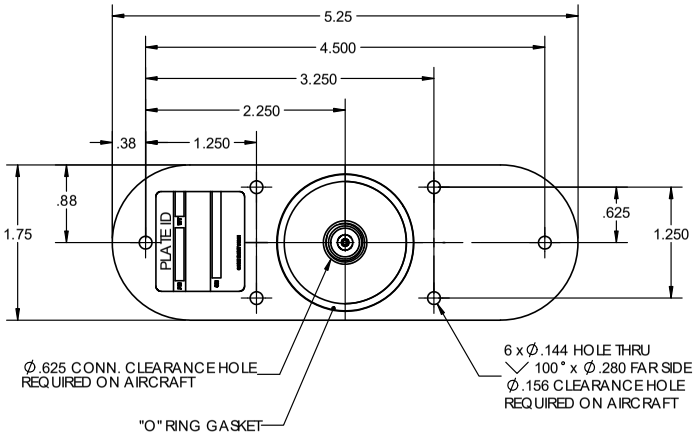

NOTES: UNLESS OTHERWISE SPECIFIED.

1. RF CHARACTERISTICS
   - FREQUENCY _____ 2.400-2.475 GHz AND 5.170-5.820 GHz
   - VSWR _____ 1.6 : 1 MAX. AND 1.92:1 MAX.
   - RETURN LOSS _____ -12.7 dB MAX. AND -10.0 dB MAX.
   - POLARIZATION _____ VERTICAL
   - RADIATION PATTERN _____ EQUIVALENT OF A QUARTER WAVE STUB
   - RF POWER _____ 100 WATTS MAX.
   - IMPEDANCE _____ 50 OHMS
2. FINISH: POLYURETHANE PAINT WHITE.
3. MOUNTING SURFACE, CONNECTOR AND MOUNTING HOLES ARE FREE OF PAINT.
4. RTCA DO-160G, ENV. CAT.:
   [F2X]ACE[R(C,C1)H(R)U2(F,F1)S(L)]XSFSXSXXXX[XXX][XX]X[XXXXXX][XX]AXX
5. WEIGHT: .3 LB MAX.
6. INSTALLATION INSTRUCTIONS A15017 SUPPLIED WITH ANTENNA.
7. TEST TO ATP CI 150-500-L FT.

ASSY DWG C15014

UNLESS OTHERWISE SPECIFIED	CONTRACT NO.			Comant Industries, Inc.			
DIMENSIONS ARE IN INCHES TOLERANCES ON DECIMALS .XX ± .03 .XXX ± .010 FRACTIONS ± 1/32 ANGLES ± 1°	APPROVALS		DATE	ANTENNA- DUAL BAND WiFi			
MACHINE FINISH 125 ✓ PER ANSI-B46.1 REMOVE BURRS AND SHARP EDGES .015 MAX MEET DIMENSIONS BEFORE PLATING DIMENSIONS ARE PER ASME Y14.5M	DRAWN	M. NGUYEN	07/13/15				
	CHECK	D. HOLLOWAY	07/13/15				
	ENGR	D. HOLLOWAY	07/13/15				
MATERIAL :	MFG	J. JONES	07/13/15	DWG SIZE C	CODE IDENT 51351	DWG. NO. CI 150-500-L	REV. B
DO NOT SCALE DRAWING	QC	S. ADAMS	07/13/15	SCALE: 1:1	CAD FILE: --	SHEET : 1 OF 1	

DWG NO CI 150-500-L REV. B

THALES

Warning: Drawing for reference only and may be outdated, contact support for current revision.