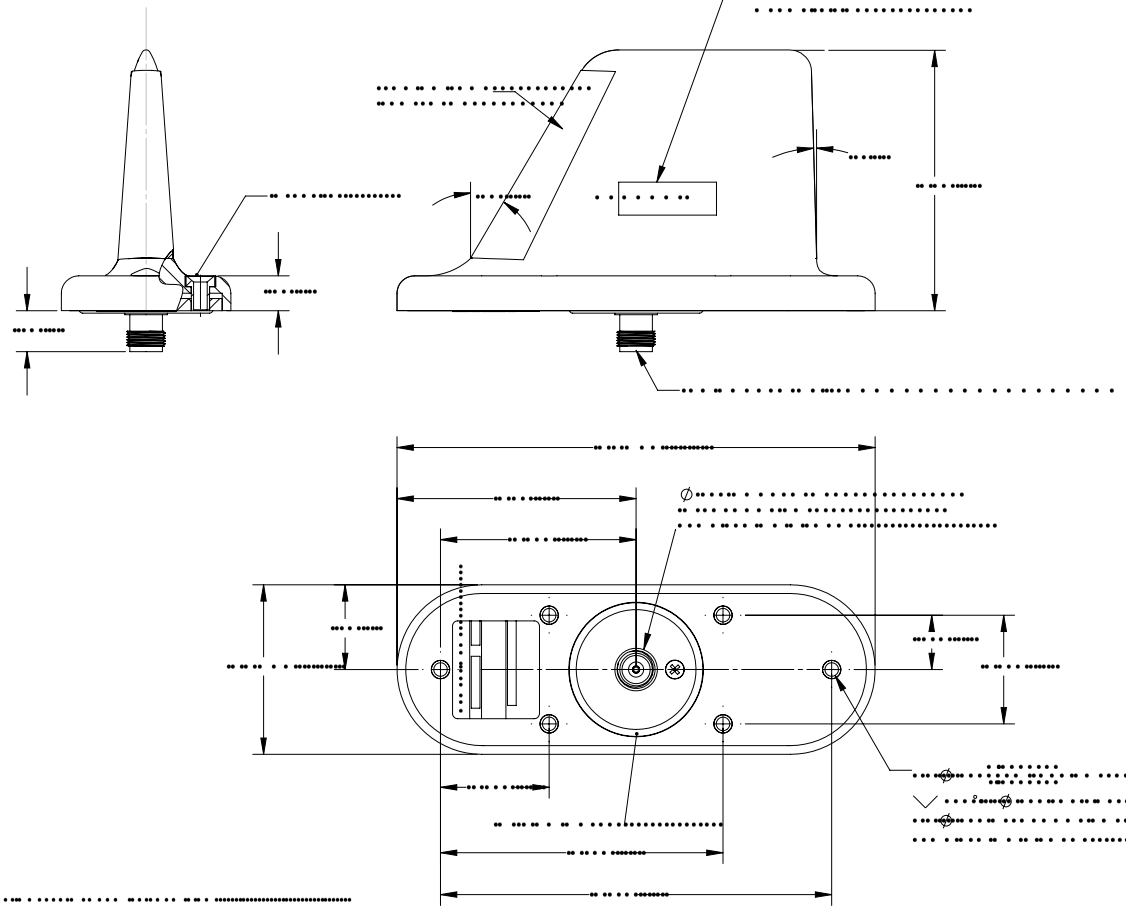

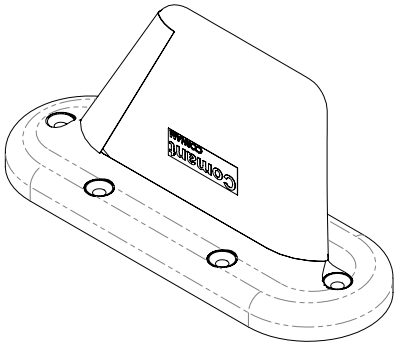

REVISIONS			
LTR	DESCRIPTION	DATE	APPROVAL

--	ITEM NO	PART NUMBER	DESCRIPTION	MATERIAL / SPECIFICATIONS
QTY REQD		PARTS LIST		

UNLESS OTHERWISE SPECIFIED
DIMENSIONS ARE IN INCHES
TOLERANCES ON DECIMALS
.XX ± .03 .XXX ± .010
FRACTIONS ± 1/16 ANGLES ± 1°
MACHINE FINISH ✓ PER ANSI- B46.1
REMOVE BURRS AND
SHARP EDGES .015 MAX
MEET DIMENSIONS BEFORE PLATING
DIMENSIONS ARE PER ASME Y14.5M

MATERIAL :

DO NOT SCALE DRAWING

CONTRACT NO.

APPROVALS		DATE
DRAWN		
CHECK		
ENGR		
MFG		
QC		

Comant Industries, Inc.

S-BAND ANTENNA-
Wi-Fi

DWG SIZE	CODE IDENT	DWG. NO.	REV.
C	51351	CI 150-250-L	F

SCALE: 1:1 CAD FILE: -- SHEET : 1 OF 1

DWG NO CI 150-250-L REV. F

THALES

Warning: Drawing for reference only and may be outdated, contact support for current revision.