THE INFORMATION CONTAINED IN THIS DRAWING IS THE SOLE PROPERTY OF Comant Industries, Inc. ANY REPRODUCTION IN PART OR WHOLE WITHOUT THE WRITTEN PERMISSION OF Comant Industries, Inc. IS PROHIBITED.

REVISIONS				
LTR	DESCRIPTION		DATE	APPROVED
E	REDRAWN. REF ECN 03-286	HN	01/12/04	DH 02/03/04
F	REF ECN 08-095	HN	12/09/08	DH 12/09/08
G	REF ECN 19-008	MN	01/18/19	DH 01/18/19
H	REF ECN 20-059	RM	5/31/21	DH 07/07/21

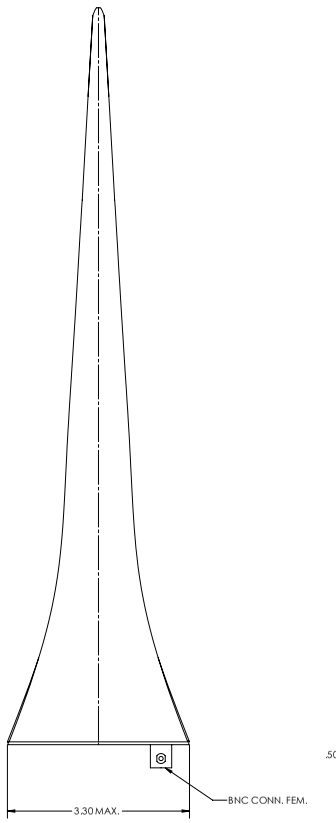

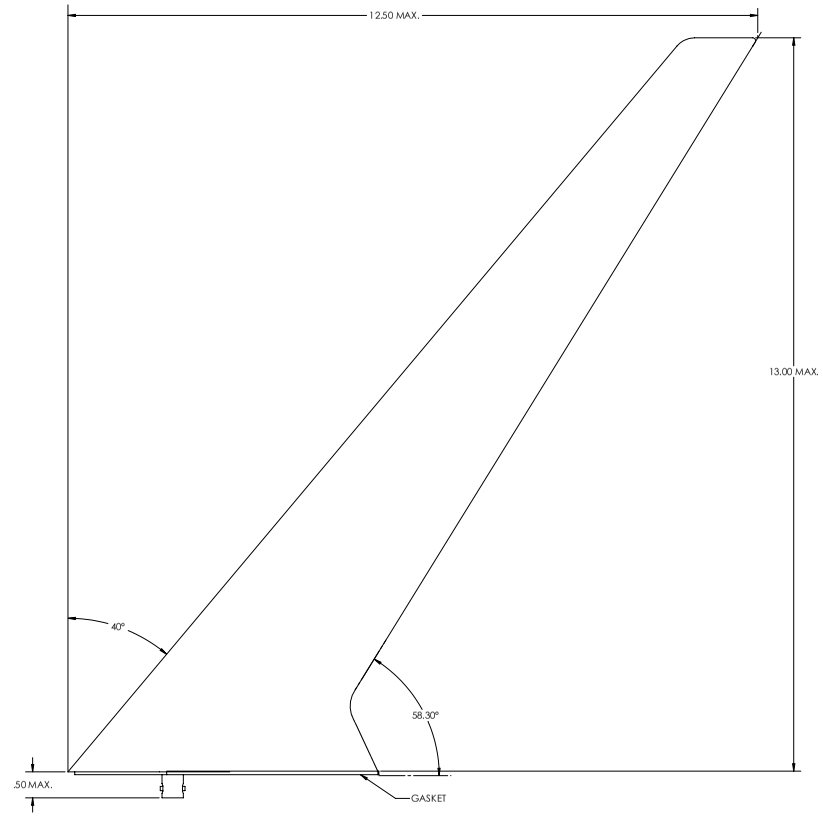

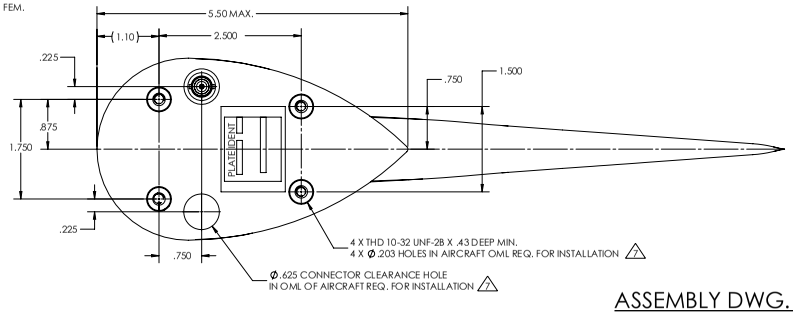

ASSEMBLY DWG. C13801

NOTES: UNLESS OTHERWISE SPECIFIED

1. RF CHARACTERISTICS
   - 1.1 FREQUENCY _____ 118 - 137 MHz
   - 1.2 VSWR _____ 2.9 : 1 MAX
   - 1.3 RETURN LOSS _____ -6.25 dB
   - 1.4 POLARIZATION _____ VERTICAL
   - 1.5 RADIATION PATTERN _____ OMNI DIRECTIONAL
   - 1.6 POWER RATING _____ 25 WATTS
   - 1.7 IMPEDANCE _____ 50 OHMS
2. FINISH: GLOSSY WHITE POLYURETHANE PAINT, NON YELLOWING.
3. MOUNTING SURFACE, CONNECTOR AND MOUNTING HOLES ARE FREE OF PAINT.
4. AIR SPEED RATING: 350 KNOTS TAS
5. TSO C37d, C38d, RTCA DO-160D, ENV. CAT.: [D2X]ACB[R(C,C1)U(F,F1)XWFDXSXXXXX[XX]X[XXXX]XAX
6. WEIGHT: 1.25 LB. MAX.
7. INDICATED DIMENSIONS PROVIDE INSTALLATION (FOOTPRINT) INFORMATION.

INSTALLATION DRAWING

--	ITEM NO.	PART NUMBER	DESCRIPTION	MATERIAL / SPECIFICATIONS
QTY REQD		PARTS LIST		

UNLESS OTHERWISE SPECIFIED
DIMENSIONS ARE IN INCHES
TOLERANCES ON DECIMALS
X ± .03 .XX ± .01 .XXX ± .005
FRACTIONS ± 1/32 ANGLES ± 1°
MACHINE FINISH 125√ PER ANSI- B46.1
REMOVE BURRS AND
SHARP EDGES .015 MAX
MEET DIMENSIONS BEFORE PLATING
DIMENSIONS ARE PER ASME Y14.5M
MATERIAL : --

DO NOT SCALE DRAWING

CONTRACT NO.

APPROVALS		DATE
DRAWN	H. NGUYEN	01/12/04
CHECK	J. GOMEZ	02/02/04
ENGR	J. FRANKS	02/03/04
QC	C. DARABAN	02/03/04
APPD	D. HOLLOWAY	02/02/04

Comant Industries, inc.

ANTENNA -
VHF COMMUNICATIONS

DWG SIZE	CODE IDENT	DWG. NO.	REV.
D	51351	CI 138	H

SCALE: 1:1 CAD FILE: -- SHEET : 1 OF 1

DWG NO CI 138 REV H

THALES

Warning: Drawing for reference only and may be outdated, contact support for current revision.