REVISIONS				
LTR	DESCRIPTION		DATE	APPROVAL
C	REDRAWN. REF ECN 03-158	HN	07/08/03	DJH 07/09/03
D	RE ECN 08-095	HN	11/14/08	DH 11/14/08

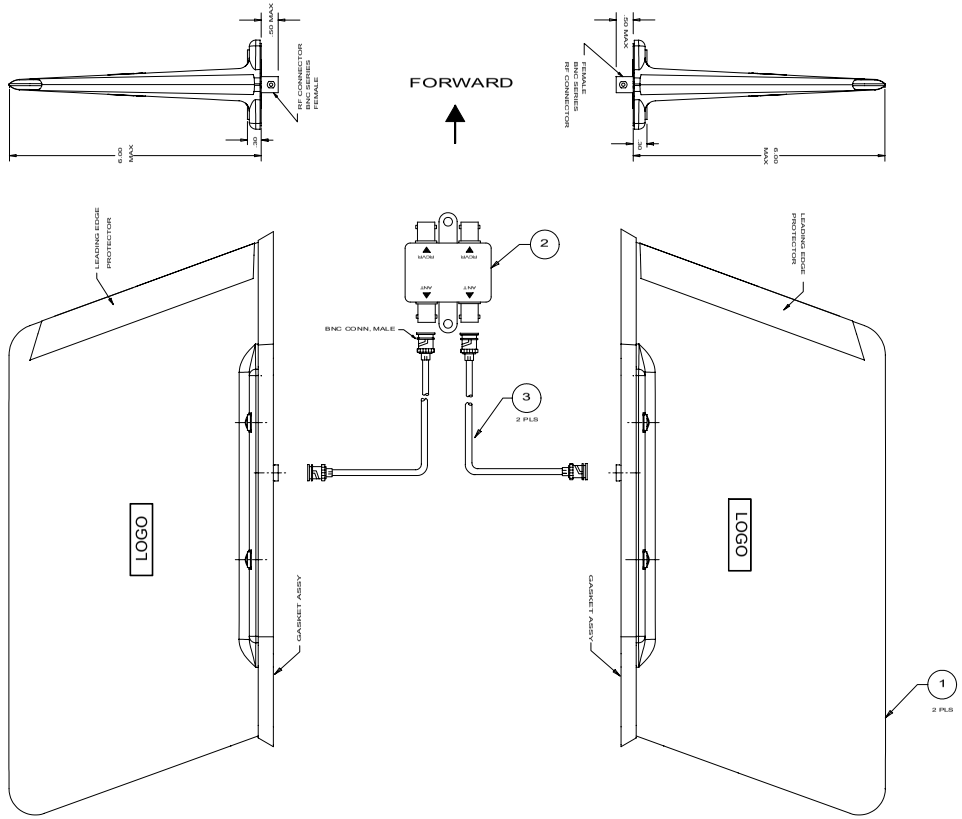

NOTES:

1. RF CHARACTERISTICS:

	VOR/LOC	AND	G/S
1.1 FREQUENCY:	108-118 MHz		329-335 MHz
1.2 VSWR:	6.0:1 MAX		5.0:1 MAX
RETURN LOSS:	- 2.92 dB		-3.52 dB

(WHEN TESTED IN THE COMPLETE ANTENNA SYSTEM).

1.3 IMPEDANCE: 50 OHMS NOMINAL

1.4 POLARIZATION: HORIZONTAL

2. AIRSPEED RATING: 600 KNOTS T.A.S @ 25,000 FT
3. TSO C34e, C36e, C40c RTCA DO-160D
   ENV. CAT. : [F2X]ACB[T(E1,P)]XRFDXSXXXX[XX][X[XXXX]XCX.
4. SYSTEM WEIGHT: 3.00 LBS. MAX.
5. FINISH: WHITE POLYURETHANE PAINT, NON YELLOWING

6 APPLY ON THE SYSTEM.

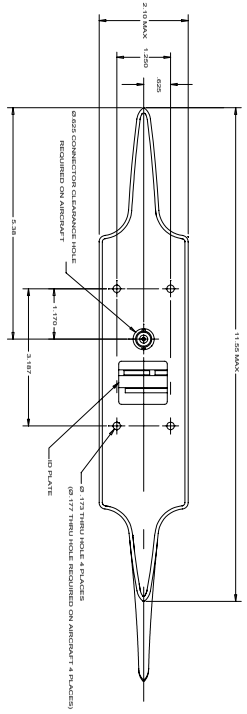

ANTENNA FOOTPRINT WITHOUT GASKET

POWER COMBINER
COMANT P/N CI 120-5

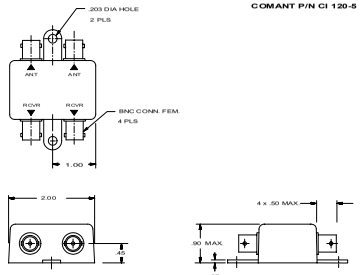

QTY	ITEM NO.	PART NO.	DESCRIPTION	MATERIAL / SPECIFICATIONS
1	5	B120180-1	ANTENNA SYSTEM LABEL	6
1	4	A12038	INSTALLATION INSTRUCTIONS	INCLUDED
2	3	CI 120-2	CABLE ASSY	
1	2	CI 120-5	POWER COMBINER	
2	1	CI 120-1-L	ANTENNA-BLADE	

LIST OF MATERIALS

NEXT ASSY	USED ON	DASH NO.
APPLICATION		

UNLESS OTHERWISE SPECIFIED
DIMENSIONS ARE IN INCHES
TOLERANCES ON
DEC. XX ±.03 XXX ±.010
FRACTIONS ±1/16 ANGLES ±1°
MACH FINISH 125 PER ASME B46.1
REMOVE BURRS AND
SHARP EDGES, 0.15 MAX.
MISIT DIM. BEFORE PLATING
DIMENSIONS ARE PER ASME Y14.5M
MATERIAL
DO NOT SCALE DRAWING

CONTRACT NO. CESSNA
DATE JULY 08-03

DFTSM	H.Nguyen	07/08/03
CHECK	J. Gomez	07/09/03
ENGR	D.J.Holloway	07/09/03
QC	P.Bosneanu	07/09/03
APPD	D.J.Holloway	07/09/03

Comant Industries, Inc.

TITLE
ANTENNA SYSTEM-
VOR/LOC/GS

D | CODE IDENT 51351 | DWG. NO. **CI 120-200G/S-L**

SCALE: NONE | WT: | SHT 1 OF 1

CI 120-200G/S-L | D

THALES

Warning: Drawing for reference only and may be outdated, contact support for current revision.