THE INFORMATION CONTAINED IN THIS DRAWING IS THE SOLE PROPERTY OF Comant Industries, inc. ANY REPRODUCTION IN PART OR WHOLE WITHOUT THE WRITTEN PERMISSION OF Comant Industries, inc. IS PROHIBITED.

REVISIONS

REV.	DESCRIPTION		DATE	APPROVED
A	RELEASED DRAWING	JF	6/29/04	DH 6/30/04
B	REF ECN 08-095	MN	1/21/09	DH 1/22/08
C	REF ECN 14-114	MN	10/07/14	DH 10/07/14
D	REF ECN 19-111	RM	4/6/20	DH 4/6/20
E	REF ECN 20-086	RM	5/10/21	DH 07/07/21

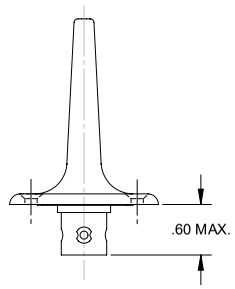

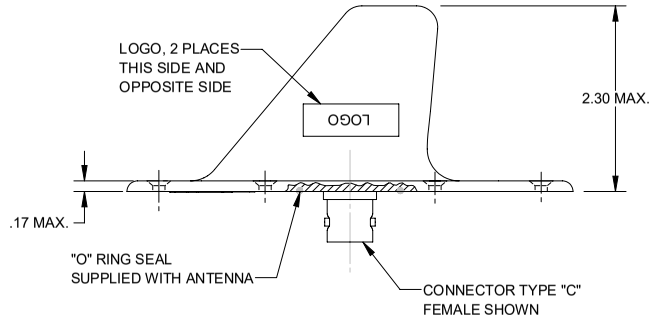

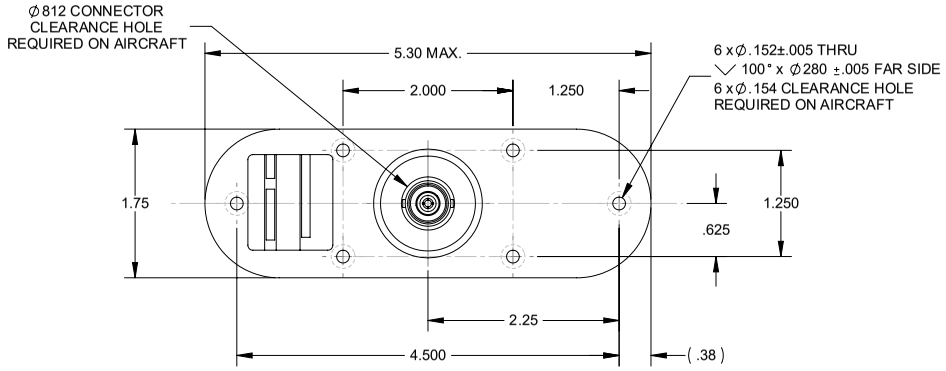

SPECIFICATION NOTES:

1. RF CHARACTERISTICS:
   - FREQUENCY _____ 960 - 1220 MHz
   - VSWR _____ 1.5:1 MAX
   - POWER _____ PEAK 3KW
     AVERAGE 100W
   - IMPEDANCE _____ RF 50 OHMS
     DC SHORT CIRCUIT
   - POLARIZATION _____ VERTICAL
   - GAIN _____ AVERAGE AT HORIZONTAL: 0 dB
   - RADIATION PATTERN _____ OMNI DIRECTIONAL,
     EQUIVALENT OF A QUARTER WAVE STUB
2. FINISH: GLOSS WHITE POLYURETHANE ENAMEL PAINT.
3. MOUNTING SURFACE: CHEM FILM CLASS 3 CLEAR PER MIL-C-5541
4. SIDE LOAD: WILL WITHSTAND 175 LBS.
5. APPROVAL: TSO C74c (ATC TRANSPONDER)
   TSO C66c (DME)
   TSO C112 (ATCRBS / MODE S) CLASS 1A
   RTCA DO-160D ENV. CAT. :[F2X]ACB[S(L)U(F,F1)T(C,C1,R)]
   XRFDXSXXXXX[XX]X[XXXX][1A]XX.
6. WEIGHT: .25 LB.
7. A11020 INSTALLATION INSTRUCTIONS SUPPLIED WITH ANTENNA.

ASSY DWG. D11016

INSTALLATION DRAWING

--	ITEM NO	PART NUMBER	DESCRIPTION	MATERIAL / SPECIFICATIONS
QTY REQD		PARTS LIST		

UNLESS OTHERWISE SPECIFIED
DIMENSIONS ARE IN INCHES
TOLERANCES ON
DECIMALS .XX ± .03 .XXX ± .010
FRACTIONS ± 1/16 ANGLES ± 1°
MACHINE FINISH 125 ⌵ PER ANSI- B46.1
REMOVE BURRS AND
SHARP EDGES .015 MAX
MEET DIMENSIONS BEFORE PLATING
DIMENSIONS ARE PER ASME Y14.5M
MATERIAL :
DO NOT SCALE DRAWING

CONTRACT NO.

APPROVALS		DATE
DRAWN	J FRANKS	06/29/04
CHECK	J GOMEZ	06/29/04
ENGR	D HOLLOWAY	06/29/04
QC	S ADAMS	06/29/04
APPD	D HOLLOWAY	06/29/04

Comant Industries, Inc.

DME / TRANSPONDER
ATCRBS / MODE S ANTENNA

DWG SIZE	CODE IDENT	DWG. NO.	REV.
C	51351	CI 110-61-30	E

SCALE: 1 / 1 | CAD FILE: -- | SHEET : 1 OF 1

DWG NO CI 110-61-30 REV. E

THALES

Warning: Drawing for reference only and may be outdated, contact support for current revision.