REVISIONS				
LTR	DESCRIPTION		DATE	APPROVAL
K	REDRAW. REF ECN 06-91	HN	09/20/06	AV 09/20/06
L	REF ECN 08-095	HN	11/11/08	DH 11/11/08

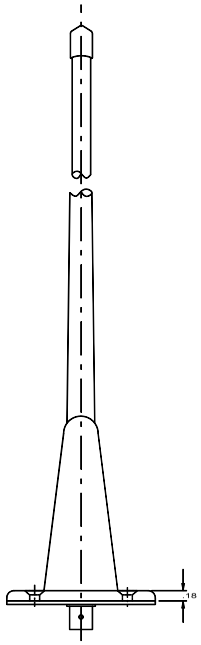

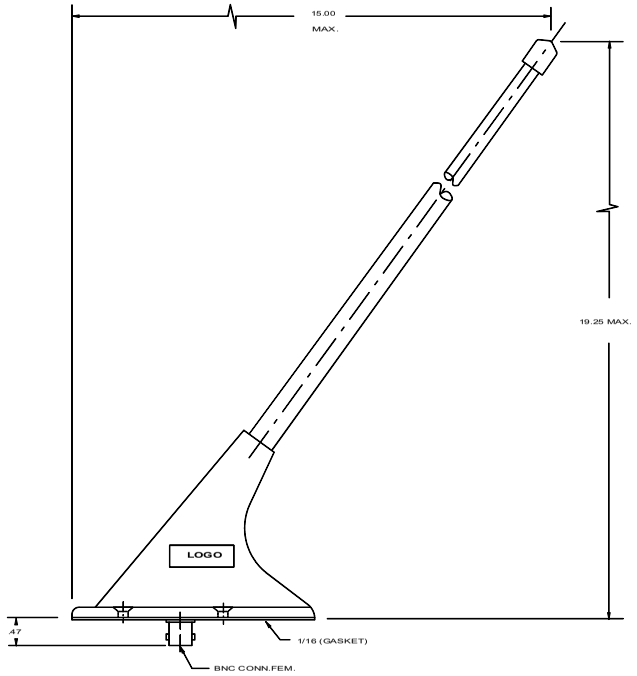

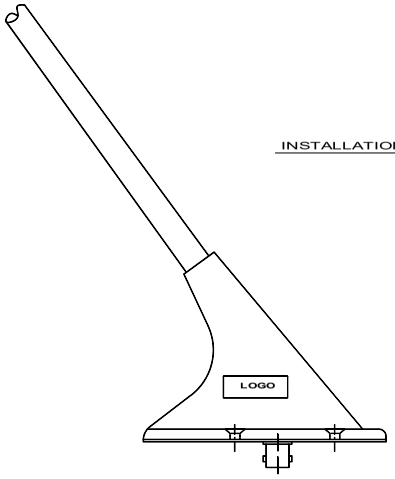

INSTALLATION DRAWING

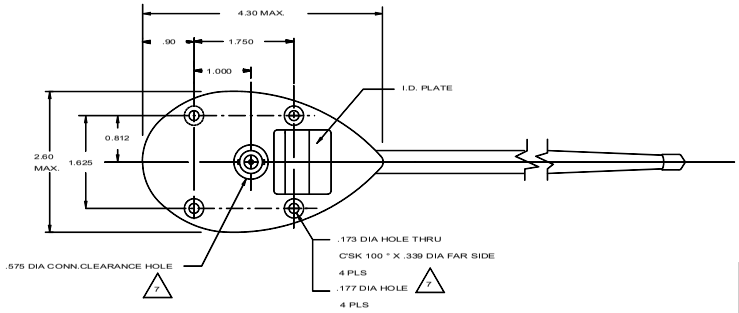

NOTES: UNLESS OTHERWISE SPECIFIED

1. RF CHARACTERISTICS

FREQUENCY	118 - 137 MHz
VSWR	2.5:1 MAX.
R/L	-7.36 dB
POLARIZATION	VERTICAL
RADIATION PATTERN	OMNI DIRECTIONAL
POWER RATING	50 WATTS
IMPEDANCE	50 OHMS

2. FINISH : WHITE GLOSSY POLYURETHANE PAINT NON-YELLOWING
3. MOUNTING SURFACE, CONNECTOR AND MOUNTING HOLES ARE FREE OF PAINT.
4. WEIGHT : 0.6 LB
5. AIRSPEED RATING : 250 KNOTS TAS
6. TSO C37d, C38d, RTCA DO-160D ENV. CAT.: [D2X]ACB[R(C,C1)U(F,F1)]XWF DXSXXXX[XX]X[XXXX]XAX
7. HOLE REQUIRED THRU OML OF AIRCRAFT FOR INSTALLATION.

ASSEMBLY DWG NO. D10901

UNLESS OTHERWISE SPECIFIED DIMENSIONS ARE IN INCHES TOLERANCES ON DEC. XX ± .03 XXX ± .010 FRACTIONS ± 1/16 ANGLES ± 1° MACH.FINISH 125 PER ASME B46.1 REMOVE BURRS AND SHARP EDGES .015 MAX. MEET DIM. BEFORE PLATING DIMENSIONS ARE PER ASME Y14.5M MATERIAL DO NOT SCALE DRAWING	CONTRACT NO.		Comant Industries, Inc.
	DATE MAY 15, 1984		TITLE ANTENNA- VHF COMMUNICATIONS
	DFTSM AHMAD	5/15/84	
	CHECK RES	5/15/84	
	ENGR RES	5/15/84	D CODE IDENT 51351 DWG. NO. CI 109
	APPD R. SICCAMA	5/15/84	
			SCALE: 1/1 WT: 4 SHT 1 OF 1

CI 109

THALES

Warning: Drawing for reference only and may be outdated, contact support for current revision.