THE INFORMATION CONTAINED IN THIS DRAWING IS THE SOLE PROPERTY OF Comant Industries, Inc. ANY REPRODUCTION IN PART OR WHOLE WITHOUT THE WRITTEN PERMISSION OF Comant Industries, Inc. IS PROHIBITED.

| REVISIONS | | | | |
|---|---|---|---|---|
| LTR | DESCRIPTION | | DATE | APPROVED |
| E | REDRAWN. REF ECN 04-64 | HN | 5/29/90 | DH 5/29/90 |
| F | REF ECN 16-103 | MN | 11/03/16 | DH 11/04/16 |
| G | REF ECN 19-060 | RM | 7/8/19 | DH 7/8/19 |
| H | REF ECN 23-016 | RM | 3/28/23 | DH 03/28/23 |

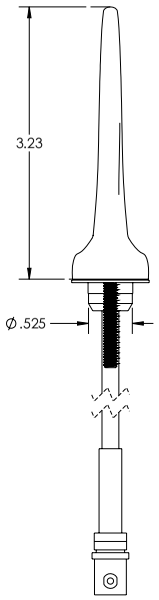


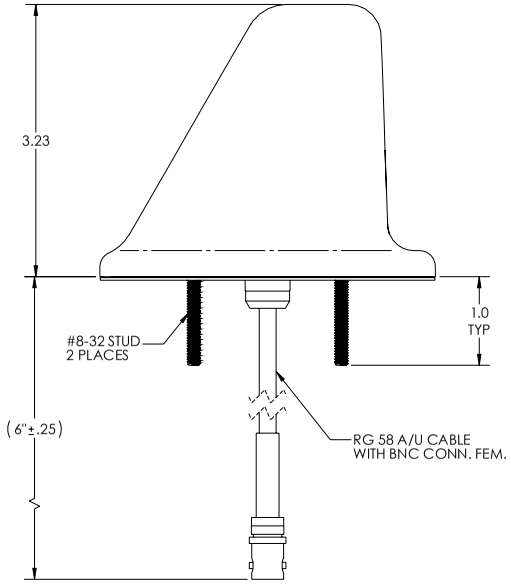


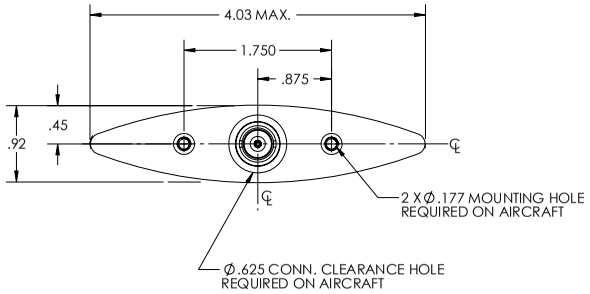


NOTES: UNLESS OTHERWISE SPECIFIED

1. RF CHARACTERISTICS
   - FREQUENCY _____ 960 TO 1220 MHz
   - VSWR _____ 1.5:1 MAX. @ 960 TO 1220 MHz
     1.3:1 MAX @ 1025 TO 1150 MHz
   - POLARIZATION _____ VERTICAL
   - RADIATION PATTERN _____ EQUIVALENT OF A QUARTER WAVE STUB
   - RF POWER _____ 2.5 KW PEAK
2. DELETED
3. MOUNTING SURFACE, CONNECTOR AND STUDS ARE FREE OF PAINT.
4. AIRSPEED: 400 KNOTS TAS @ 25,000 FT
5. TSO C66b, C74c, D0-160c ENV. CAT.: [E1]-B[CLY]XRHXXXXXXXXXXXXXX
6. WEIGHT : 0.30 LBS MAX.

DWG NO CI 105-9 REV. H

INSTALLATION DRAWING

ASSY DWG. C10501-9

| UNLESS OTHERWISE SPECIFIED | | | |
|---|---|---|---|
| DIMENSIONS ARE IN INCHES<br>TOLERANCES ON DECIMALS<br>.XX ± .03 .XXX ± .010<br>FRACTIONS ± 1/16 ANGLES ± 1° | CONTRACT NO. | | |
| MACHINE FINISH 125√ PER ANSI- B46.1<br>REMOVE BURRS AND<br>SHARP EDGES .015 MAX<br>MEET DIMENSIONS BEFORE PLATING<br>DIMENSIONS ARE PER ASME Y14.5M | APPROVALS | | DATE |
| | DRAWN | H. NGUYEN | 04/15/04 |
| | CHECK | R. GOMEZ | 04/22/04 |
| | ENGR | D. HOLLOWAY | 04/22/04 |
| MATERIAL : | QC | C. DARABAN | 04/22/04 |
| DO NOT SCALE DRAWING | APPD | D. HOLLOWAY | 04/22/04 |

**Comant Industries, Inc.**

ANTENNA-
DME TRANSPONDER

| DWG SIZE | CODE IDENT | DWG. NO. | REV. |
|---|---|---|---|
| C | 51351 | CI 105-9 | H |

SCALE: 1:1 CAD FILE: -- SHEET : 1 OF 1

THALES



Warning: Drawing for reference only and may be outdated, contact support for current revision.