THE INFORMATION CONTAINED IN THIS DRAWING IS THE SOLE PROPERTY OF Comant Industries, Inc. ANY REPRODUCTION IN PART OR WHOLE WITHOUT THE WRITTEN PERMISSION OF Comant Industries, Inc. IS PROHIBITED.

REVISIONS				
LTR	DESCRIPTION		DATE	APPROVED
E	REF EO NO. 87-4	HN	4/1/88	DH 04/01/88
F	REF ECN NO. 89-15	HN	3/17/89	DH 03/30/89
G	REF ECN 95-127	HN	10/25/95	DH 10/03/95
H	REF ECN 03-299	HN	11/18/03	JP 11/18/03
J	REF ECN 06-162	AV	12/15/06	AV 12/18/06
K	REF ECN 23-016	RM	3/28/23	03/28/23

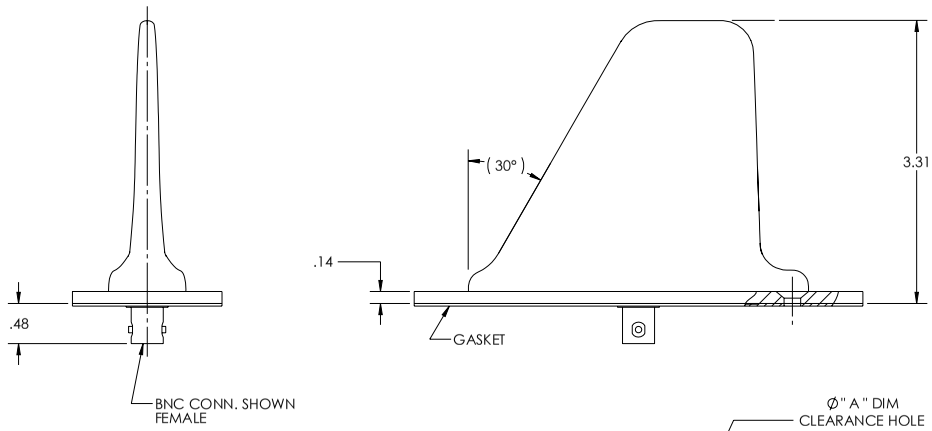

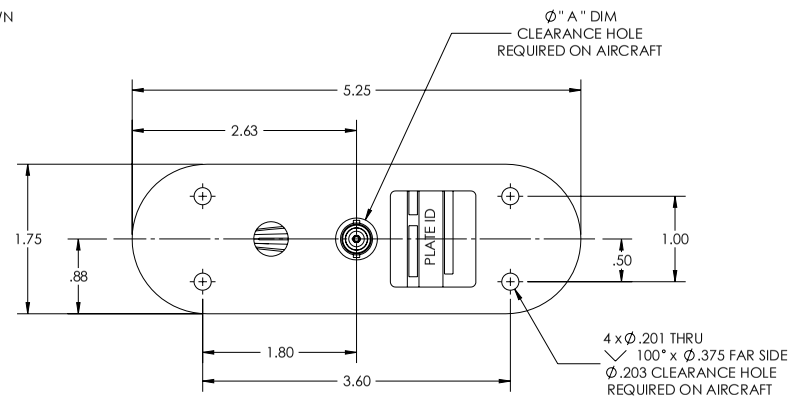

ANTENNA MODEL *	CONNECTOR TYPE	"A" DIM
CI 105-6	BNC	.575
CI 105-7	C	.750

INSTALLATION DRAWING

NOTES: UNLESS OTHERWISE SPECIFIED

1. RF CHARACTERISTICS
   - 1.1 FREQUENCY _____ 960 TO 1220 MHz AND 1025 TO 1150 MHz
   - 1.2 VSWR _____ 1.5:1 MAX. 1.3:1 MAX.
   - 1.3 POLARIZATION _____ VERTICAL
   - 1.4 RADIATION PATTERN _____ EQUIVALENT OF A QUARTER WAVE STUB
2. FINISH: WHITE POLYURETHANE PAINT
3. MOUNTING SURFACE, CONNECTOR AND MOUNTING HOLES ARE FREE OF PAINT.
4. MEET REQUIREMENTS OF TSO C66b, C74c, D0-160C ENV. CAT.: [E1]-B[CLY]XRHXXXXXXXXXXXXXX
5. WEIGHT : 0.40 LBS.
6. AIRSPEED RATING: 400 KNOTS TAS @ 25,000 FT

ASS DWG. C24401-*

UNLESS OTHERWISE SPECIFIED	CONTRACT NO.		
DIMENSIONS ARE IN INCHES TOLERANCES ON DECIMALS .X ± .03 .XX ± .01 .XXX ± .005 FRACTIONS ± 1/32 ANGLES ± 1°	APPROVALS		DATE
MACHINE FINISH 125 PER ANSI- B46.1 REMOVE BURRS AND SHARP EDGES .015 MAX	DRAWN	BOCORONDO	4/13/82
MEET DIMENSIONS BEFORE PLATING DIMENSIONS ARE PER ASME Y14.5M	CHECK	R. PORTYER	5/4/82
	ENGR	R. PORTYER	5/4/82
MATERIAL :	APPD	L. BROWN	5/4/82
DO NOT SCALE DRAWING			

Comant Industries, Inc.

ANTENNA-
DME TRANSPONDER

DWG SIZE	CODE IDENT	DWG. NO.	REV.
C	51351	CI 105-*	K

SCALE: 1:1 | CAD FILE: -- | SHEET : 1 OF 1

DWG NO CI 105-* REV K

THALES

Warning: Drawing for reference only and may be outdated, contact support for current revision.