THE INFORMATION CONTAINED IN THIS DRAWING IS THE SOLE PROPERTY OF Comant Industries, inc. ANY REPRODUCTION IN PART OR WHOLE WITHOUT THE WRITTEN PERMISSION OF Comant Industries, inc. IS PROHIBITED.

REVISIONS				
LTR	DESCRIPTION		DATE	APPROVED
D	ADDED ASSY DWG. UPDATE TSO NO. ADDED NOTE 6		12/26/84	RES 12/27/84
E	REF ECN 95-127	HN	10/25/95	DH 10/30/95
F	REDRAWN IN 3D CAD. REF ECN 15-024	MN	5/11/15	DH 5/13/15
G	REF ECN 16-041	MN	5/11/16	DH 5/11/16
H	REF ECN 19-087	RM	9/9/19	DH 9/9/19
J	REF ECN 20-052	RM	9/25/20	DH 10/20/20
K	REF ECN 23-016	RM	3/28/23	DH 03/28/23

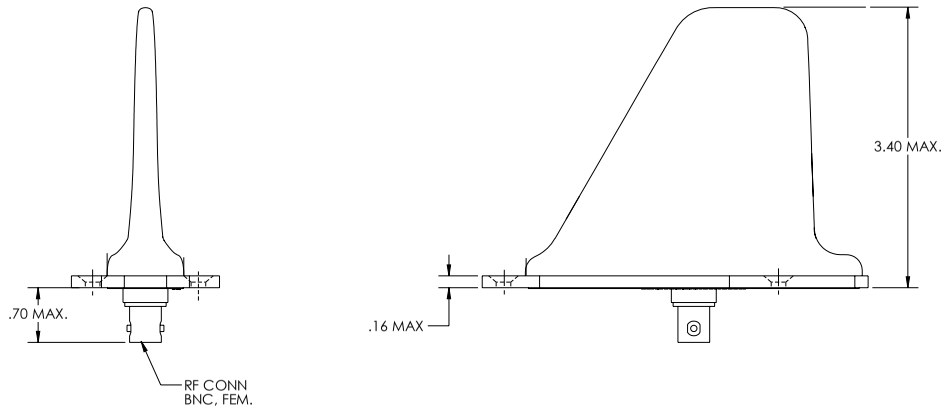

INSTALLATION DRAWING

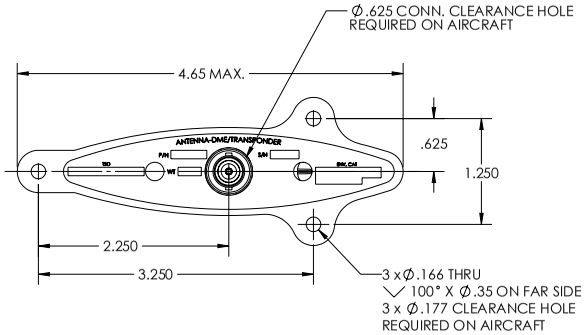

NOTES: UNLESS OTHERWISE SPECIFIED

1. RF CHARACTERISTICS
   - 1.1 FREQUENCY _____ 960 TO 1220 MHz
   - 1.2 VSWR _____ 1.5:1 MAX. @ 960 TO 1220 MHz
     1.3:1 MAX @ 1025 TO 1150 MHz
   - 1.3 POLARIZATION _____ VERTICAL
   - 1.4 RADIATION PATTERN _____ EQUIVALENT OF A QUARTER WAVE STUB
   - 1.5 RF POWER _____ 2.5 KW PEAK
2. FINISH: WHITE POLYURETHANE PAINT, NON YELLOWING.
3. MOUNTING SURFACE, CONNECTOR AND MOUNTING HOLES ARE FREE OF PAINT.
4. TSO C66b, C74c, DO-160C ENV. CAT.: [E1]-B[CLY]XRHXXXXXXXXXXXXXX
5. WEIGHT : 0.24 LBS
6. SPEED RATING: 450 KNOTS TAS @ 25,000 FT
7. DELETED.

ASSY DWG. C10531

--	ITEM NO	PART NUMBER	DESCRIPTION	MATERIAL / SPECIFICATIONS
QTY REQD		PARTS LIST		

UNLESS OTHERWISE SPECIFIED
DIMENSIONS ARE IN INCHES
TOLERANCES ON DECIMALS
.XX ± .03 .XXX ± .010
FRACTIONS ± 1/16 ANGLES ± 1°
MACHINE FINISH 125 PER ANSI- B46.1
REMOVE BURRS AND
SHARP EDGES .015 MAX
MEET DIMENSIONS BEFORE PLATING
DIMENSIONS ARE PER ASME Y14.5M

MATERIAL :

DO NOT SCALE DRAWING

CONTRACT NO.

APPROVALS		DATE
DRAWN	DAVEY	10/15/77
CHECK	D.DAMARAS	01/15/78
ENGR	H. SUMMERS	01/15/78
APPD	H. SUMMERS	01/15/78

Comant Industries, inc.

ANTENNA -BLADE
DME TRANSPONDER

DWG SIZE	CODE IDENT	DWG. NO.	REV.
C	51351	CI 105-3	K

SCALE: 1:1 CAD FILE: -- SHEET : 1 OF 1

DWG NO CI 105-3 REV K

THALES

Warning: Drawing for reference only and may be outdated, contact support for current revision.